MIAMI-DADE COUNTY
PRODUCT CONTROL SECTION
11805 SW 26 Street, Room 208
Miami, Florida 33175-2474
T (786) 315-2590 F (786) 315-2599
www.miamidade.gov/economy

DEPARTMENT OF REGULATORY AND ECONOMIC RESOURCES (RER)
BOARD AND CODE ADMINISTRATION DIVISION

NOTICE OF ACCEPTANCE (NOA)

Designer Products LLC dba Cambek Designer Doors
702 Troy Street
River Falls, WI 54022

SCOPE:

This NOA is being issued under the applicable rules and regulations governing the use of construction materials. The documentation submitted has been reviewed and accepted by Miami-Dade County RER-Product Control Section to be used in Miami Dade County and other areas where allowed by the Authority Having Jurisdiction (AHJ).

This NOA shall not be valid after the expiration date stated below. The Miami-Dade County Product Control Section (In Miami Dade County) and/or the AHJ (in areas other than Miami Dade County) reserve the right to have this product or material tested for quality assurance purposes. If this product or material fails to perform in the accepted manner, the manufacturer will incur the expense of such testing and the AHJ may immediately revoke, modify, or suspend the use of such product or material within their jurisdiction. RER reserves the right to revoke this acceptance if it is determined by Miami-Dade County Product Control Section that this product or material fails to meet the requirements of the applicable building code.

This product is approved as described herein and has been designed to comply with the Florida Building Code, including the High Velocity Hurricane Zone.

DESCRIPTION: Models H-3 / H-4 (Partially Glazed) Insulated Wood Sectional Garage Door up to 18'-0" Wide x 8'-0" High

APPROVAL DOCUMENT: Drawing No. **1618**, titled "18 ft. Wide Hurricane Impact Wood Garage Doors", sheets 1 through 7 of 7, prepared by W. W. Schaefer Engineering & Consulting, P.A., dated 10/21/2008, with last revision D1 dated 11/13/2018, signed and sealed by Warren W. Schaefer, P.E. on 07/17/2019, bearing the Miami-Dade County Product Control revision stamp with the Notice of Acceptance number and expiration date by the Miami-Dade County Product Control Section.

MISSILE IMPACT RATING: Large and Small Missile Impact Resistant

LABELING: A permanent label with the manufacturer's name or logo, manufacturing address, model/series number, the positive and negative design pressure rating, indicate impact rated if applicable, installation instruction drawing reference number, approval number (NOA), the applicable test standards, and the statement reading 'Miami-Dade County Product Control Approved' is to be located on the door's side track, bottom angle, or inner surface of a panel.

RENEWAL of this NOA shall be considered after a renewal application has been filed and there has been no change in the applicable building code negatively affecting the performance of this product.

TERMINATION of this NOA will occur after the expiration date or if there has been a revision or change in the materials, use, and/or manufacture of the product or process. Misuse of this NOA as an endorsement of any product, for sales, advertising or any other purposes shall automatically terminate this NOA. Failure to comply with any section of this NOA shall be cause for termination and removal of NOA.

ADVERTISEMENT: The NOA number preceded by the words Miami-Dade County, Florida, and followed by the expiration date may be displayed in advertising literature. If any portion of the NOA is displayed, then it shall be done in its entirety.

INSPECTION: A copy of this entire NOA shall be provided to the user by the manufacturer or its distributors and shall be available for inspection at the job site at the request of the Building Official. An original signed and sealed company letter from Designer Doors, Inc. is required, proving that the Models H-3 / H-4 18'-0" Wide Wood Sectional Garage Door was purchased from them in order for this NOA to be valid on any job.

This NOA **revises NOA # 19-0723.02** and consists of this page 1 and evidence pages E-1, E-2, E-3 and E-4, as well as approval document mentioned above.

The submitted documentation was reviewed by **Carlos M. Utrera, P.E.**

MIAMI-DADE COUNTY APPROVED

NOA No. 20-0622.27
Expiration Date: March 18, 2025
Approval Date: August 27, 2020

NOTICE OF ACCEPTANCE: EVIDENCE SUBMITTED

1. Evidence submitted under previous NOAs

A. DRAWINGS *"Submitted under NOA # 14-1118.17"*

1. Drawing No. **1618**, titled "18' Wide Hurricane Impact Wood Garage Doors", sheets 1 through 7 of 7, prepared by W. W. Schaefer Engineering & Consulting, P.A., dated 10/21/2008, with last revision B1 dated 11/12/2014, signed and sealed by Warren W. Schaefer, P.E.

B. TESTS *"Submitted under NOA # 10-1119.02"*

1. Test reports on 1) Large Missile Impact Test per FBC, TAS 201-94
2) Cyclic Wind Pressure Loading per FBC, TAS 203-94
along with marked-up drawings and installation diagram on a Series/Model H2/4 Section, glazed garage door, prepared by Architectural Testing, Inc., Test Report No. **94833.01-201-18**, dated 01/13/2010, signed and sealed by Joseph A. Reed, P.E.

2. Addendum letter to Test Reports No. **87472.01-201-18** and **87473.01-201-18** on Forced Entry Test per FBC, FBC 2411 3.2.1, TAS 202-94, prepared by Architectural Testing, Inc., dated 08/18/2009**,** signed and sealed by Joseph A. Reed, P.E.

"Submitted under NOA # 08-1224.07"

3. Test reports on 1) Uniform Static Air Pressure Test Loading per FBC, TAS 202-94
2) Large Missile Impact Test per FBC, TAS 201-94
3) Cyclic Wind Pressure Loading per FBC, TAS 203-94
along with marked-up drawings and installation diagram of a Double Wide Hurricane Impact Un-Glazed and Glazed Garage Doors, prepared by Hurricane Test Laboratory, LLC, Test Report No. **G507-0402-08**, dated 08/21/2008, signed and sealed by Vinu J. Abraham, P.E.

C. CALCULATIONS: *"Submitted under NOA # 08-1224.07"*

1. Anchoring and stress calculations, prepared by W.W. Schaefer Engineering & Consulting, P.A., dated 12/17/2008, signed and sealed by Warren W. Schaefer, P.E.

D. QUALITY ASSURANCE

1. Miami-Dade Department of Regulatory and Economic Resources (RER)

E. MATERIAL CERTIFICATIONS *"Submitted under NOA # 14-1118.17"*

1. Notice of Acceptance No. **11-0624.01**, issued to **E.I. DuPont DE Nemours & Co., Inc.** for their "**DuPont Butacite® PVB Interlayer**" approved on 09/08/2011, expiring on 12/11/2016.

2. Notice of Acceptance No. **11-0325.05** issued to **Solutia, Inc**. for their "**Saflex IIIG**" approved on 05/05/2011, expiring on 05/21/2016.

Carlos M. Utrera, P.E.
Product Control Examiner
NOA No. 20-0622.27
Expiration Date: March 18, 2025
Approval Date: August 27, 2020

NOTICE OF ACCEPTANCE: EVIDENCE SUBMITTED

F. STATEMENTS *"Submitted under NOA # 14-1118.17"*

1. Statement letter of code conformance to 2010 and 5th edition (2014) FBC issued by W.W. Schaefer Engineering & Consulting, P.A., dated 04/10/2014, signed and sealed by Warren W. Schaefer, P.E.

2. Statement letter of no financial interest, issued by W.W. Schaefer Engineering & Consulting, P.A., dated 11/12/2014, signed and sealed by Warren W. Schaefer, P.E.

3. Asset purchase agreement dated 04/25/2014.

2. Evidence submitted under NOA # 17-0712.09

A. DRAWINGS

1. Drawing No. **1618**, titled "18' Wide Hurricane Impact Wood Garage Doors", sheets 1 through 7 of 7, prepared by W. W. Schaefer Engineering & Consulting, P.A., dated 10/21/2008, with last revision C1 dated 07/06/2017, signed and sealed by Warren W. Schaefer, P.E.

B. TESTS

1. None.

C. CALCULATIONS

1. None.

D. QUALITY ASSURANCE

1. Miami-Dade Department of Regulatory and Economic Resources (RER)

E. MATERIAL CERTIFICATIONS

1. Notice of Acceptance No. **16-1117.01**, issued to Kuraray America, Inc. for their "Trosifol Ultraclear, Clear and Color PVB Glass Interlayers approved on 01/19/2017, expiring on 07/08/2019.

2. Notice of Acceptance No. **15-1201.11**, issued to Eastman Chemical Company (MA) for their "Saflex Clear and Color Glass Interlayers" approved on 03/17/2016, expiring on 05/21/2021.

F. STATEMENTS

1. Statement letter of code conformance to the 6th Edition (2017) FBC issued by W.W. Schaefer Engineering & Consulting, P.A., dated 07/06/2017, signed and sealed by Warren W. Schaefer, P.E.

Carlos M. Utrera, P.E.
Product Control Examiner
NOA No. 20-0622.27
Expiration Date: March 18, 2025
Approval Date: August 27, 2020

NOTICE OF ACCEPTANCE: EVIDENCE SUBMITTED

3. Evidence submitted under NOA # 18-1128.03

A. DRAWINGS

1. Drawing No. **1618**, titled "18 ft. Wide Hurricane Impact Wood Garage Doors", sheets 1 through 7 of 7, prepared by W. W. Schaefer Engineering & Consulting, P.A., dated 10/21/2008, with last revision D1 dated 11/13/2018, signed and sealed by Warren W. Schaefer, P.E.

B. TESTS

1. None.

C. CALCULATIONS

1. None.

D. QUALITY ASSURANCE

1. Miami-Dade Department of Regulatory and Economic Resources (RER)

E. MATERIAL CERTIFICATIONS

1. None.

F. STATEMENTS

1. Asset purchase agreement dated 11/08/2017.

Carlos M. Utrera, P.E.
Product Control Examiner
NOA No. 20-0622.27
Expiration Date: March 18, 2025
Approval Date: August 27, 2020

NOTICE OF ACCEPTANCE: EVIDENCE SUBMITTED

4. New evidence submitted

A. DRAWINGS *"Submitted under NOA # 19-0723.02"*

1. Drawing No. **1618**, titled "18 ft. Wide Hurricane Impact Wood Garage Doors", sheets 1 through 7 of 7, prepared by W. W. Schaefer Engineering & Consulting, P.A., dated 10/21/2008, with last revision D1 dated 11/13/2018, signed and sealed by Warren W. Schaefer, P.E. on 07/17/2019.

B. TESTS

1. None.

C. CALCULATIONS

1. None.

D. QUALITY ASSURANCE

1. Miami-Dade Department of Regulatory and Economic Resources (RER)

E. MATERIAL CERTIFICATIONS

1. Notice of Acceptance No. **19-0305.02**, issued to Kuraray America, Inc. for their "Trosifol Ultraclear, Clear and Color PVB Glass Interlayers approved on 05/09/2019, expiring on 07/08/2024.

2. Notice of Acceptance No. **17-0712.05**, issued to Eastman Chemical Company (MA) for their "Saflex Clear and Color Glass Interlayers" approved on 09/07/2017, expiring on 05/21/2021.

F. STATEMENTS

1. Statement letter of code conformance to the 6th Edition (2017) and 7th Edition (2020) FBC issued by W.W. Schaefer Engineering & Consulting, P.A., dated 06/04/2020, signed and sealed by Warren W. Schaefer, P.E.

Carlos M. Utrera, P.E.
Product Control Examiner
NOA No. 20-0622.27
Expiration Date: March 18, 2025
Approval Date: August 27, 2020

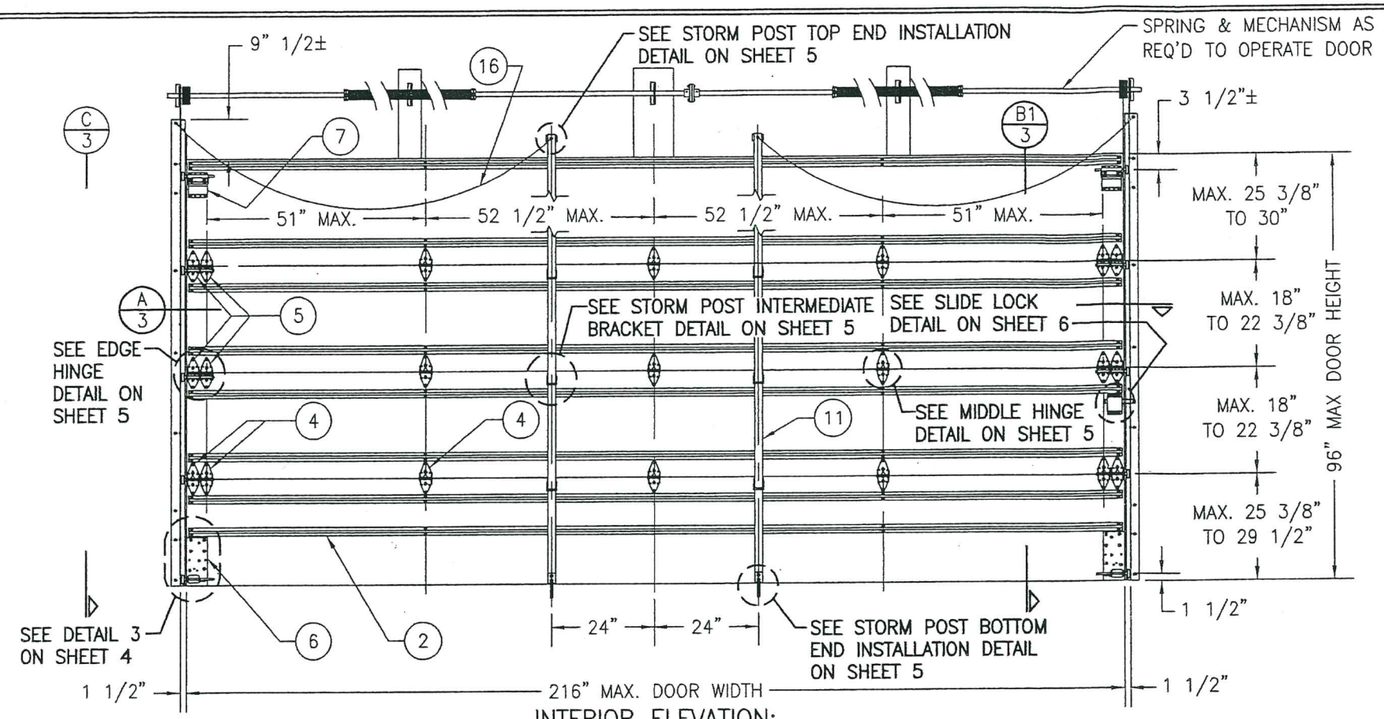

INTERIOR ELEVATION;

MODEL "H-3" FULLY WOOD PANELED GARAGE DOOR

SCALE: 3/8" = 1'-0"

(FOR STORED STORM POST LOCATION, SEE ELEVATION BELOW)

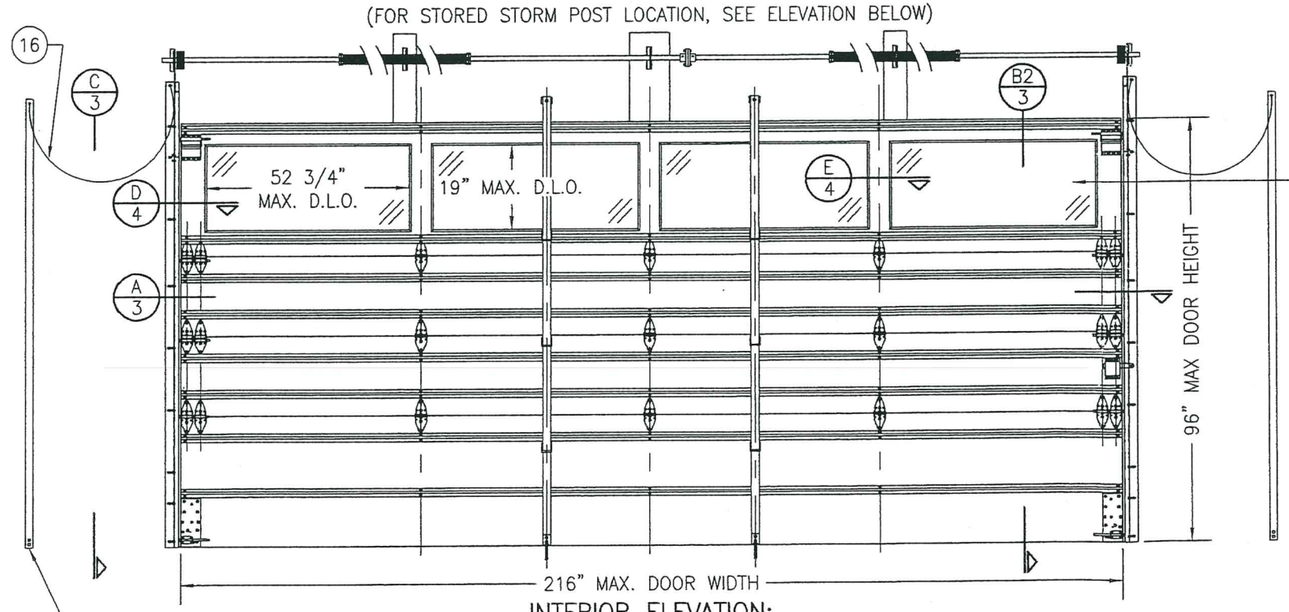

(4 D.L.O. CONDITIONS SHOWN. MORE THAN 4 D.L.O.'S MAY BE PLACED ACCROSS THE DOOR IN THE TOP OR TOP MIDDLE SECTION OF THE DOOR)

INTERIOR ELEVATION;

MODEL "H-4" PARTIALLY GLAZED GARAGE DOOR

SCALE: 3/8" = 1'-0"

(FOR DETAIL NOT SHOWN, SEE FULLY PANELED GARAGE DOOR ELEVATION ABOVE)

THESE DRAWINGS ARE APPLICABLE ONLY TO THE PRODUCT SPECIFIED. THEY MAY NOT BE USED FOR THE ASSEMBLY AND/OR INSTALLATION OF ANY OTHER PRODUCT NOR MAY THEY BE USED FOR RATIONAL AND/OR LOCAL APPROVAL OF ANY PRODUCT NOT PRODUCED BY THE MANUFACTURER STATED ON THESE DRAWINGS.

GENERAL NOTES:

1. THESE GARAGE DOOR SYSTEMS HAVE BEEN TESTED, ANALYZED & APPROVED FOR DESIGN PRESSURES NOT TO EXCEED THOSE SHOWN IN THE "ALLOWABLE DESIGN PRESSURE TABLE(S).
2. OPENINGS, BUCKING & BUCKING FASTENERS MUST BE PROPERLY DESIGNED & INSTALLED TO TRANSFER WIND LOADS TO THE STRUCTURE.
3. ALL HARDWARE & FASTENERS SHALL BE IN ACCORDANCE WITH THESE DRAWINGS & SHALL NOT VARY UNLESS SPECIFICALLY MENTIONED ON THE DRAWINGS. SPECIFIED ANCHOR EMBED TO BASE MATERIAL SHALL BE BEYOND WALL FINISH OR STUCCO.
4. THE DETAILS & SPECIFICATIONS SHOWN HEREIN REPRESENT THE PRODUCTS TESTED & PROPOSED FOR IMPACT, CYCLIC & UNIFORM STATIC AIR PRESSURE TESTING IN CONFORMANCE WITH THE FLORIDA BUILDING CODE PROTOCALS TAS-201, 202 & 203 FOR LARGE MISSILE IMPACT GARAGE DOORS.
5. THESE GARAGE DOOR SYSTEMS HAVE BEEN DESIGNED IN ACCORDANCE WITH AND MEET THE REQUIREMENTS OF THE FLORIDA BUILDING CODE (FBC) INCLUDING HIGH VELOCITY HURRICANE ZONES (HVHZ).
6. IMPACT SHUTTERS ARE NOT REQUIRED WITH THESE GARAGE DOORS.
7. ALL ANCHORS SECURING DOORS TO PRESSURE TREATED BUCKS OR WOOD FRAMING SHALL BE CAPABLE OF RESISTING CORROSION CAUSED BY THE PRESSURE TREATING CHEMICALS IN THE WOOD.
8. DETERMINE THE POSITIVE & NEGATIVE DESIGN LOADS TO USE WHEN REFERENCING THESE DOCUMENTS IN ACCORDANCE WITH THE GOVERNING CODE AND GOVERNING WIND VELOCITY. FOR WIND LOAD CALCULATIONS IN ACCORDANCE WITH THE FLORIDA BUILDING CODE, A DIRECTIONALITY FACTOR OF Kd = 0.85 MAY BE APPLIED WHEN USED IN CONJUNCTION WITH LOAD COMBINATIONS SPECIFIED IN SECTION 2.0 OF THE ASCE 7 STANDARD.
9. NO INCREASE IN ALLOWABLE STRESS HAS BEEN USED IN THE CERTIFICATION OF THIS PRODUCT. WIND LOAD DURATION FACTOR Cd = 1.6 WAS USED FOR WOOD SCREW ANALYSIS ONLY.
10. All WOOD MEMBERS OF DOORS THAT MAY POSSIBLY COME INTO CONTACT WITH MASONRY OR CONCRETE SUBSTRATES, ARE SUBJECT TO MOISTURE &/OR ARE SUBJECT TO THE OUTSIDE ENVIRONMENT SHALL BE OF AN APPROVED DURABLE SPECIES OR BE TREATED IN AN APPROVED METHOD WITH AN APPROVED PRESERVATIVE PER FBC SECTION 2326.

ALLOWABLE DESIGN PRESSURE (ALL DOOR CONDITIONS)
+48/-65 PSF

NOTE: ALL REMOVABLE STORM POST CONNECTORS SHALL BE LINKED TO THE DOOR OR THE DOOR TRACKS SUCH THAT WHEN REMOVED, THEY WILL NOT BE LOST OR MISPLACED & WILL BE STORED IN AN ACCESSIBLE LOCATION.

PRODUCT REVISED
as complying with the Florida Building Code
NOA-No. 20-0622.27
Expiration Date 03/18/2025
By
Miami-Dade Product Control

PRODUCT RENEWED
as complying with the Florida Building Code
NOA-No. 19-0723.02
Expiration Date 03/18/2025
By
Miami-Dade Product Control

DRAWN BY: W.R.M.	CHECKED BY: W.W.S.
PLOT: 1=32	DATE: 10/21/08

NO.	REVISION DESCRIPTION	BY	DATE
A1	ADD DUPONT BUTACITE GLASS	WWS	11/15/10
B1	MANUFACTURER NAME CHANGE	WWS	11/12/14
C1	MANUFACTURER NAME CHANGE	WWS	07/06/17
D1	MANUFACTURER NAME CHANGE	WWS	11/13/18

DRAWING TITLE
18 FT. WIDE HURRICANE IMPACT WOOD GARAGE DOORS

MANUFACTURER
DESIGNER PRODUCTS, LLC
dba CAMBEK DESIGNER DOORS
702 TROY ST.
RIVER FALLS, WI 54022
800-241-0525

CONSULTANTS
W. W. SCHAEFER ENGINEERING & CONSULTING, P.A. (CA 6809)
7480 150TH COURT NORTH
PALM BEACH GARDENS, FL 33418
PHONE: 561-744-3424

CERTIFICATION
JUL 17 2019
WARREN W. SCHAEFER, P.E.
P.E. NO. 44135

DRAWING NO. 1618 REV. D

SHEET NO. 1 OF 7

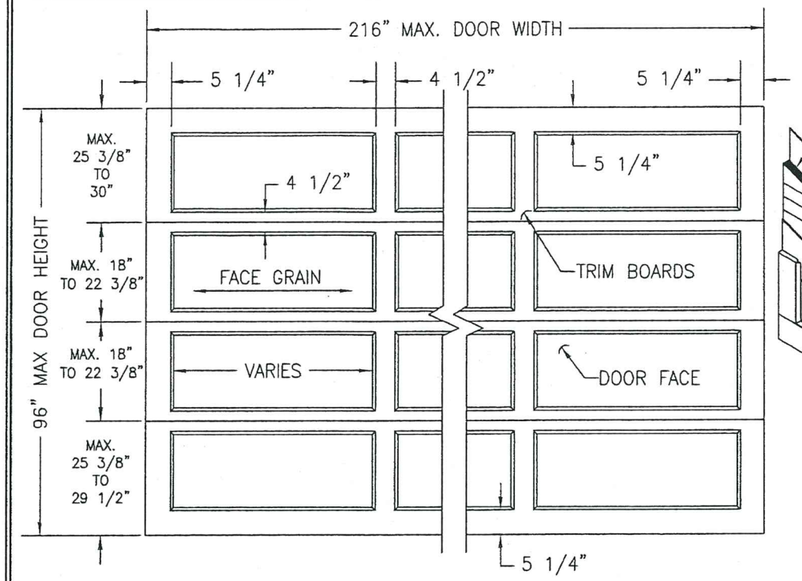

EXTERIOR ELEVATION;
RAISED PANEL GARAGE DOOR
SCALE: 3/8" = 1'-0"
(NON-GLAZED DOOR SHOWN, GLAZED DOOR IS SIMILAR)

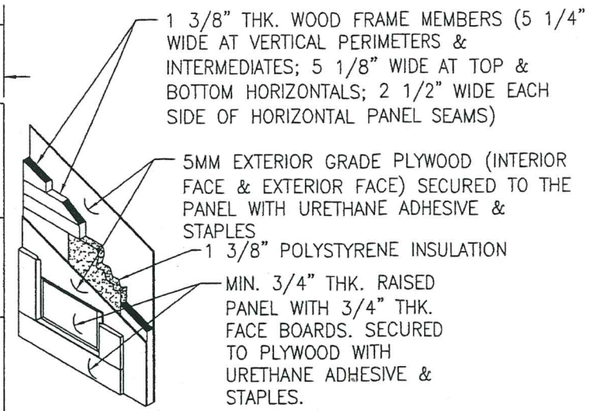

TYP. RAISED PANEL DETAIL
SCALE: N.T.S.

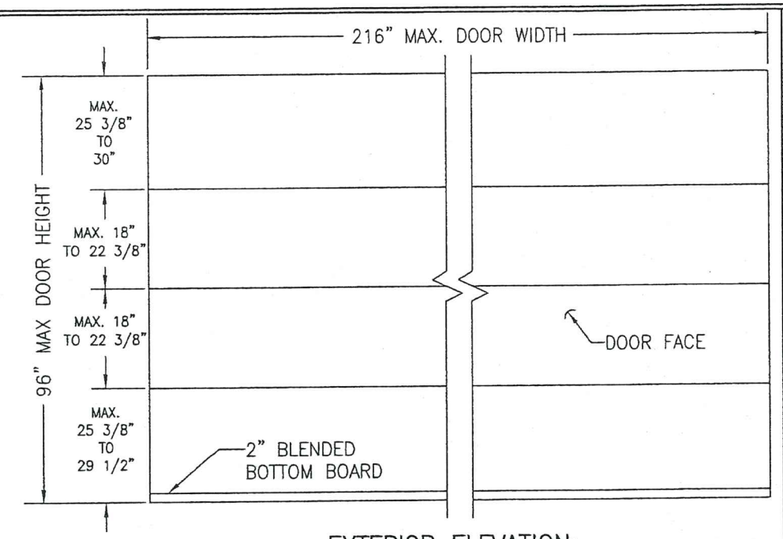

EXTERIOR ELEVATION;
FLAT PANEL GARAGE DOOR
SCALE: 3/8" = 1'-0"
(NON-GLAZED DOOR SHOWN, GLAZED DOOR IS SIMILAR)

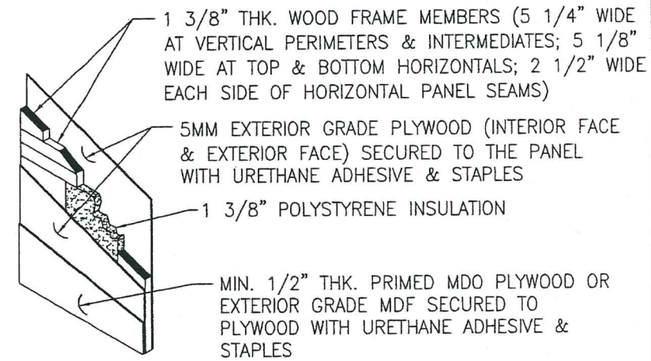

TYP. FLAT PANEL DETAIL
SCALE: N.T.S.

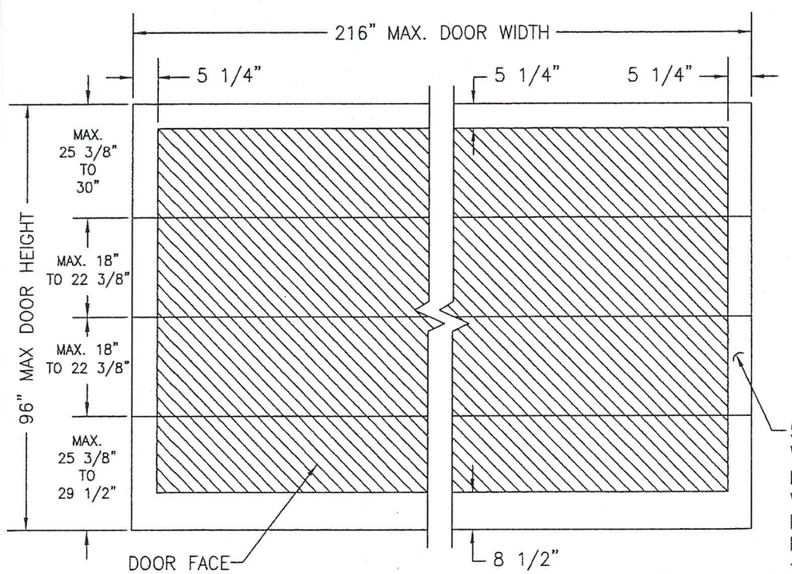

EXTERIOR ELEVATION;
V-GROOVE PANEL GARAGE DOOR
SCALE: 3/8" = 1'-0"
("V-GROOVE MAY RUN IN ANY DIRECTION)
(NON-GLAZED DOOR SHOWN, GLAZED DOOR IS SIMILAR)

PRODUCT REVISED
as complying with the Florida Building Code
NOA-No. 20-0622.27
Expiration Date 03/18/2025
By
Miami-Dade Product Control

PRODUCT RENEWED
as complying with the Florida Building Code
NOA-No. 19-0723.02
Expiration Date 03/18/2025
By
Miami-Dade Product Control

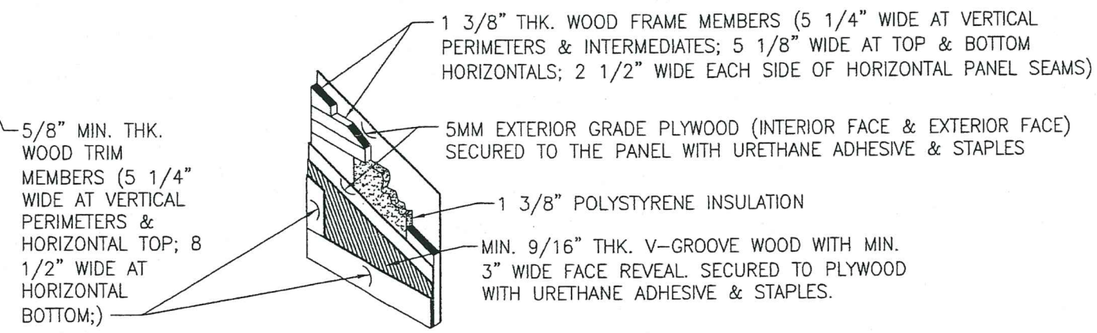

TYP. V-GROOVE PANEL DETAIL
SCALE: N.T.S.

DRAWN BY: W.R.M.	CHECKED BY: W.W.S.
PLOT: 1=32	DATE: 10/21/08

NO.	REVISION DESCRIPTION	BY	DATE

DRAWING TITLE
18 FT. WIDE HURRICANE IMPACT WOOD GARAGE DOORS

MANUFACTURER
DESIGNER PRODUCTS, LLC
dba CAMBEK DESIGNER DOORS
702 TROY ST.
RIVER FALLS, WI 54022
800-241-0525

CONSULTANTS
W. W. SCHAEFER ENGINEERING & CONSULTING, P.A. (CA 6809)
7480 150TH COURT NORTH
PALM BEACH GARDENS, FL 33418
PHONE: 561-744-3424

CERTIFICATION
JUL 17 2019
WARREN W. SCHAEFER, P.E.
P.E. NO. 44135

DRAWING NO. 1618
REV. D
SHEET NO. 2 OF 7

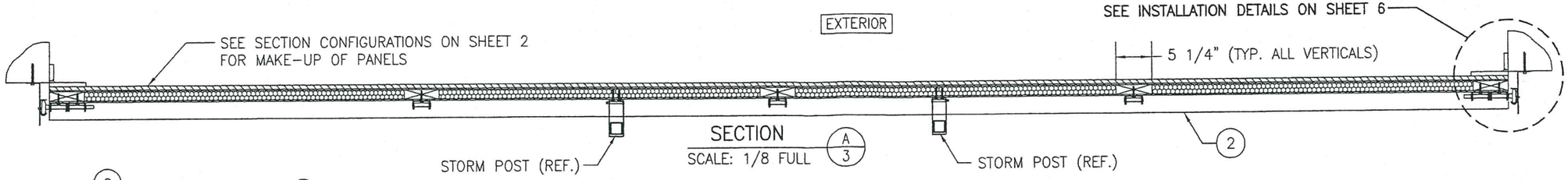

SECTION A/3
SCALE: 1/8 FULL

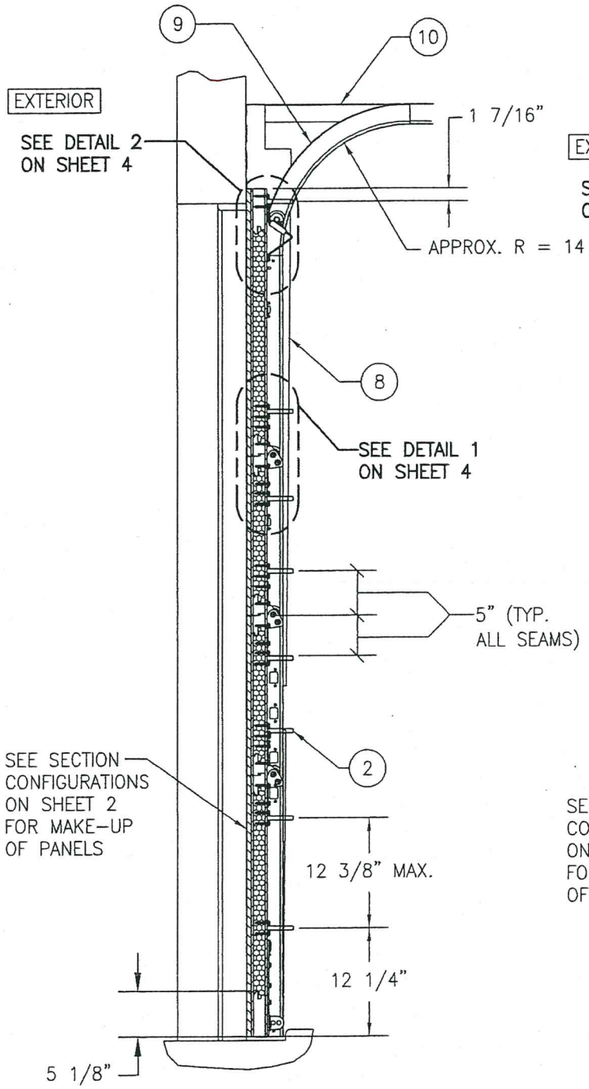

SECTION B1/3
SCALE: 1/8 FULL
(FULLY WOOD DOOR)

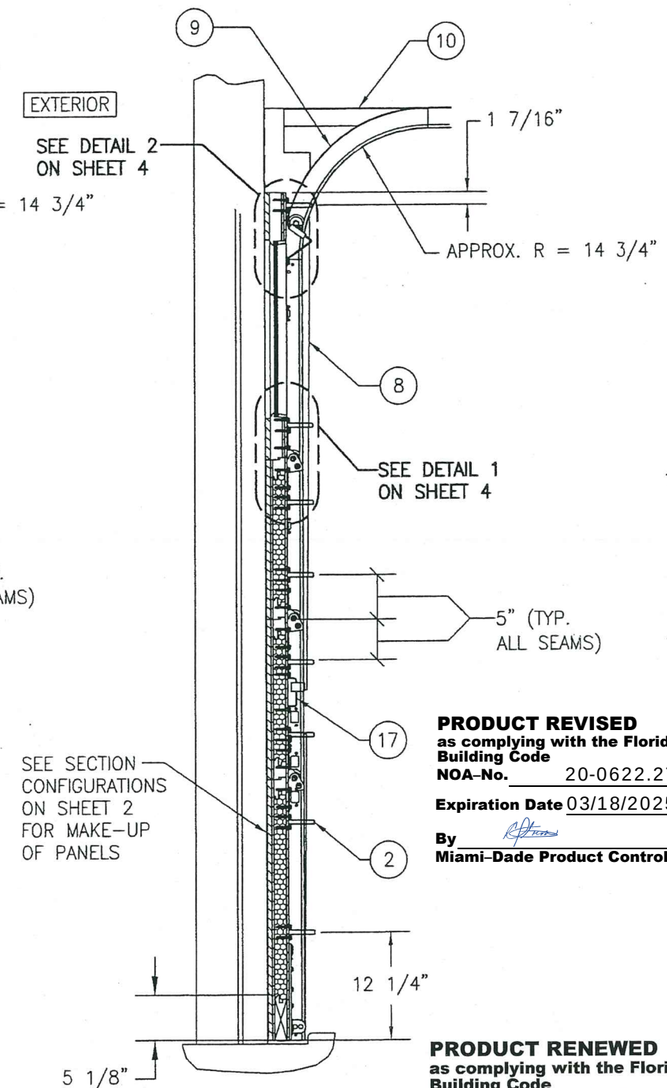

SECTION B2/3
SCALE: 1/8 FULL
(GLAZED DOOR)

PRODUCT REVISED
as complying with the Florida Building Code
NOA-No. 20-0622.27
Expiration Date 03/18/2025
By
Miami-Dade Product Control

PRODUCT RENEWED
as complying with the Florida Building Code
NOA-No. 19-0723.02
Expiration Date 03/18/2025
By
Miami-Dade Product Control

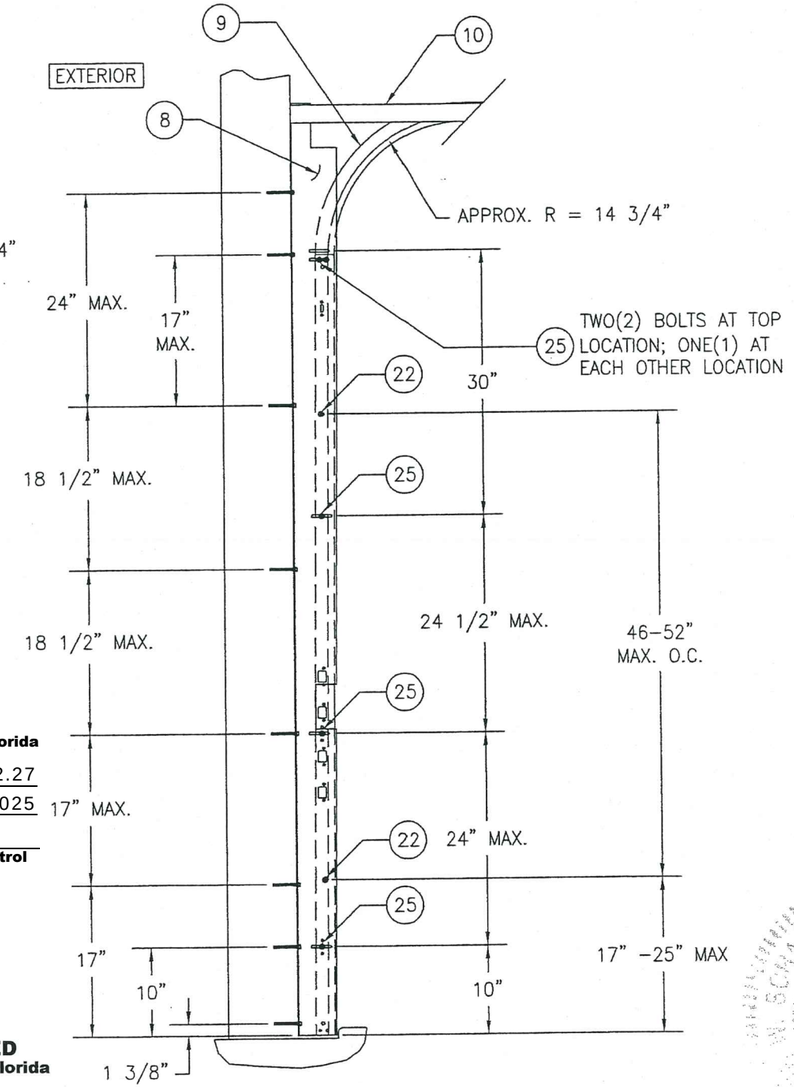

SECTION C/3
SCALE: 1/8 FULL

DRAWN BY: W.R.M.	CHECKED BY: W.W.S.
PLOT: 1=16	DATE: 10/21/08

NO.	REVISION DESCRIPTION	BY	DATE

DRAWING TITLE
18 FT. WIDE HURRICANE IMPACT WOOD GARAGE DOORS

MANUFACTURER
DESIGNER PRODUCTS, LLC
dba CAMBEK DESIGNER DOORS
702 TROY ST.
RIVER FALLS, WI 54022
800-241-0525

CONSULTANTS
W. W. SCHAEFER ENGINEERING
& CONSULTING, P.A. (CA 6809)
7480 150TH COURT NORTH
PALM BEACH GARDENS, FL 33418
PHONE: 561-744-3424

CERTIFICATION
JUL 17 2019
WARREN W. SCHAEFER, P.E.
P.E. NO. 44135

DRAWING NO. 1618
REV. D
SHEET NO. 3 OF 7

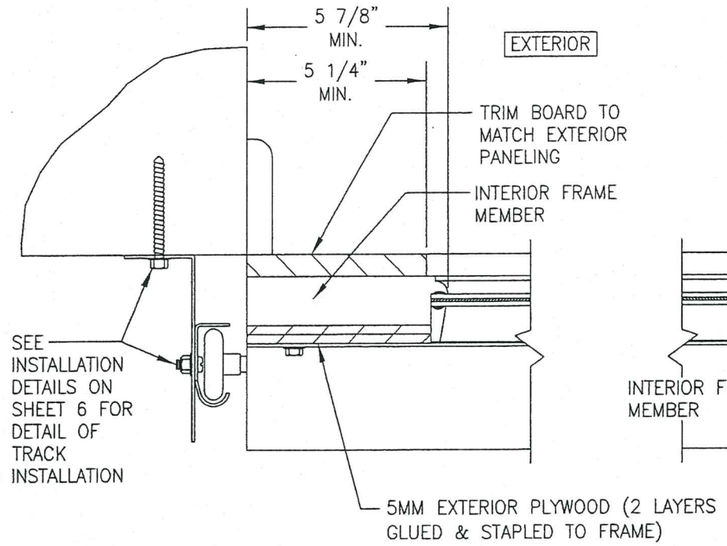

SECTION D/4
SCALE: 1/4 FULL

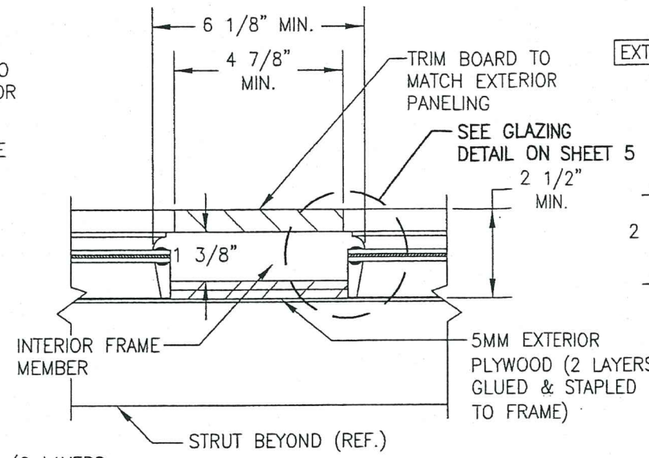

SECTION E/4
SCALE: 1/4 FULL

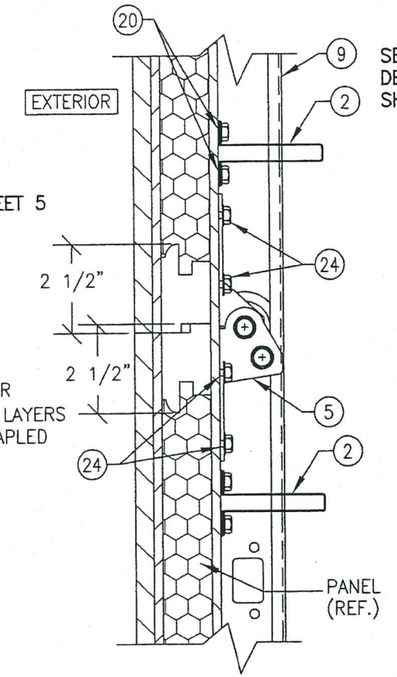

DETAIL 1
(UN-GLAZED CONDITION)

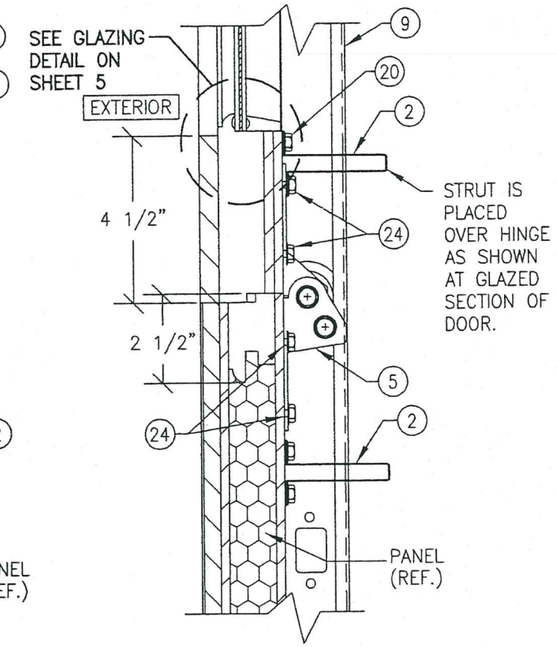

DETAIL 1
(GLAZED CONDITION)

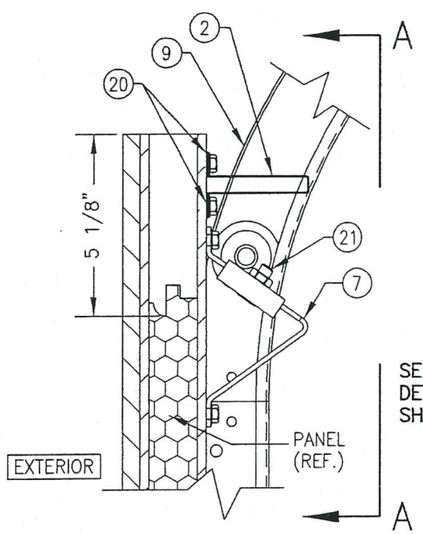

DETAIL 2
(UN-GLAZED CONDITION)

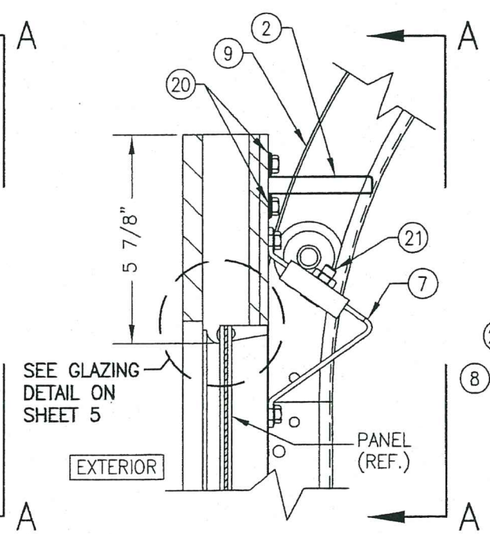

DETAIL 2
(GLAZED CONDITION)

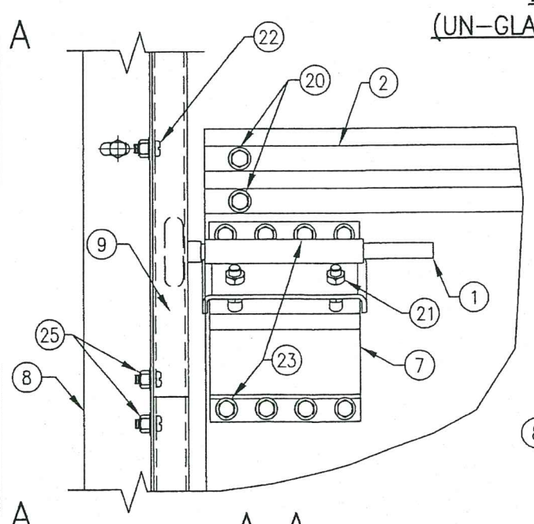

A–A

PRODUCT REVISED
as complying with the Florida Building Code
NOA-No. 20-0622.27
Expiration Date 03/18/2025
By
Miami-Dade Product Control

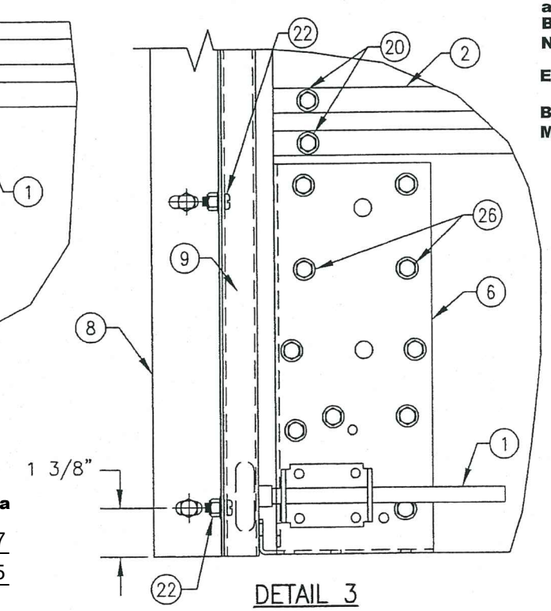

DETAIL 3

PRODUCT RENEWED
as complying with the Florida Building Code
NOA-No. 19-0723.02
Expiration Date 03/18/2025
By
Miami-Dade Product Control

DRAWN BY: W.R.M.	CHECKED BY: W.W.S.
PLOT: 1=4	DATE: 10/21/08

NO.	REVISION DESCRIPTION	BY	DATE

DRAWING TITLE
18 FT. WIDE HURRICANE IMPACT WOOD GARAGE DOORS

MANUFACTURER
DESIGNER PRODUCTS, LLC
dba CAMBEK DESIGNER DOORS
702 TROY ST.
RIVER FALLS, WI 54022
800-241-0525

CONSULTANTS
W. W. SCHAEFER ENGINEERING & CONSULTING, P.A. (CA 6809)
7480 150TH COURT NORTH
PALM BEACH GARDENS, FL 33418
PHONE: 561-744-3424

CERTIFICATION
JUL 17 2019
WARREN W. SCHAEFER, P.E.
P.E. NO. 44135

DRAWING NO. 1618
REV. D
SHEET NO. 4 OF 7

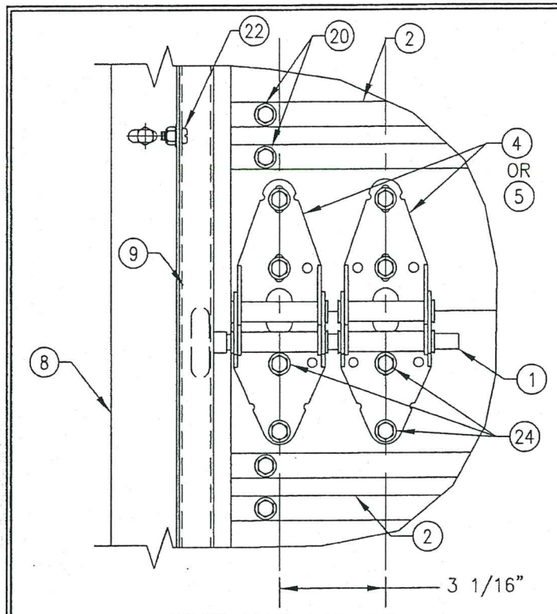

EDGE HINGE DETAIL

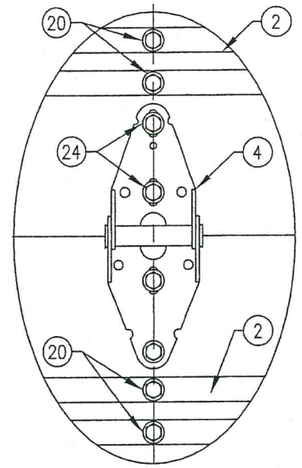

MIDDLE HINGE DETAIL

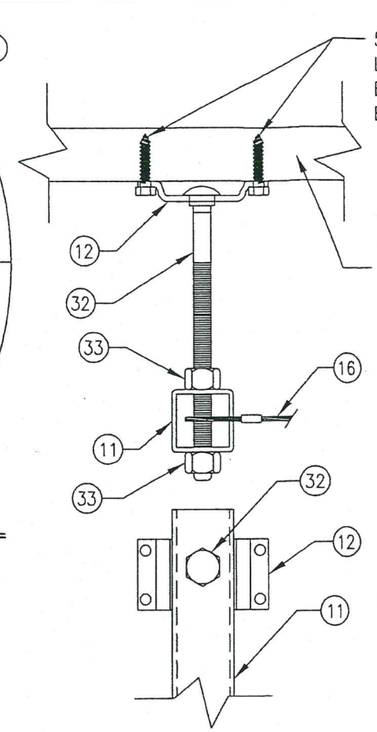

STORM POST TOP END INSTALLATION DETAIL

(INTO WOOD SUBSTRATE)

PRODUCT REVISED
as complying with the Florida Building Code
NOA-No. 20-0622.27
Expiration Date 03/18/2025
By
Miami-Dade Product Control

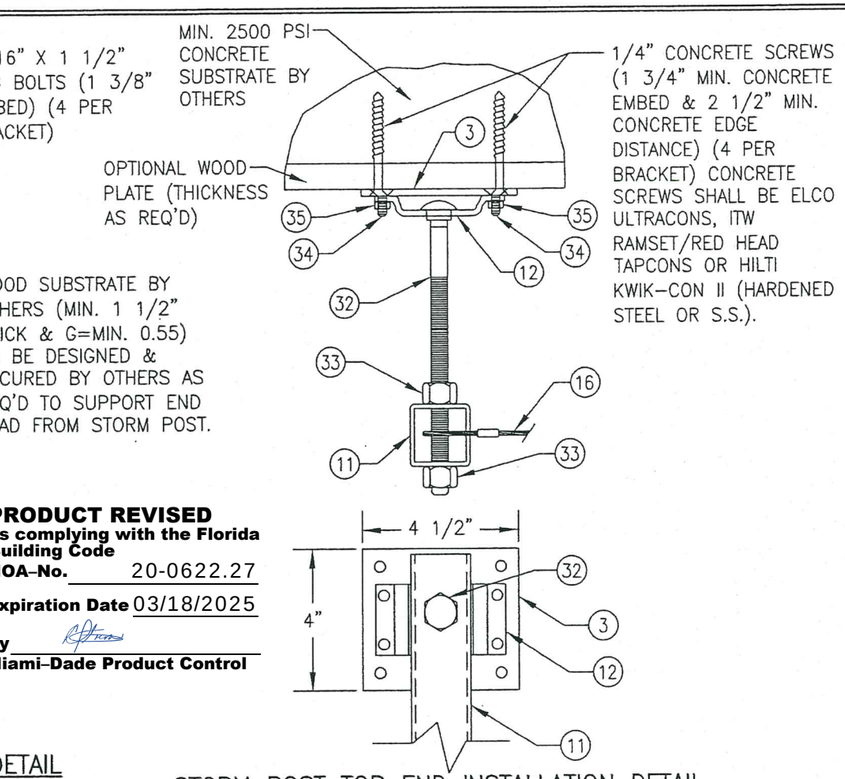

STORM POST TOP END INSTALLATION DETAIL

(INTO CONCRETE SUBSTRATE)

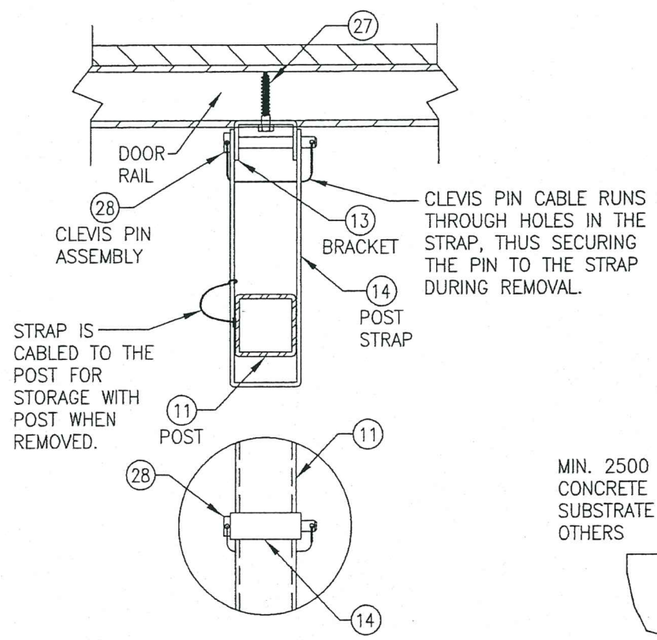

POST IS CABLED TO THE DOOR TRACK FOR STORAGE PURPOSE. ONCE POST IS REMOVED FROM THE DOOR, THE POST, STRAP & CLEVIS PIN ARE STORED NEXT TO THE DOOR.

STORM POST INTERMEDIATE BRACKET DETAIL

(1 BRACKET IS LOCATED AT EACH DOOR PANEL SEAM LOCATION; 3 TOTAL PER BAR)

PRODUCT RENEWED
as complying with the Florida Building Code
NOA-No. 19-0723.02
Expiration Date 03/18/2025
By
Miami-Dade Product Control

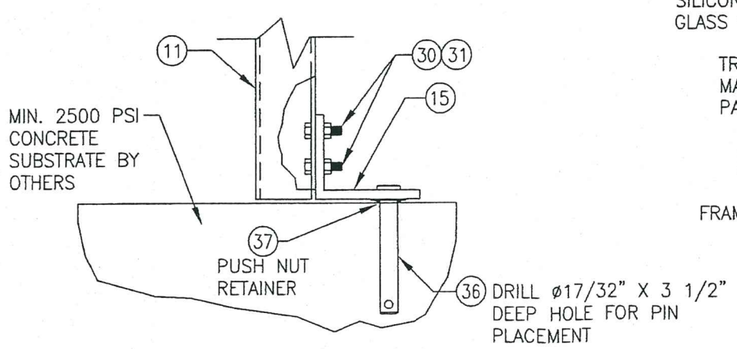

STORM POST BOTTOM END INSTALLATION DETAIL

PIN IS SECURED TO THE POST FOOT ANGLE VIA THE PUSH NUT RETAINER SHOWN SO PIN STAYS WITH THE POST DURING STORAGE.

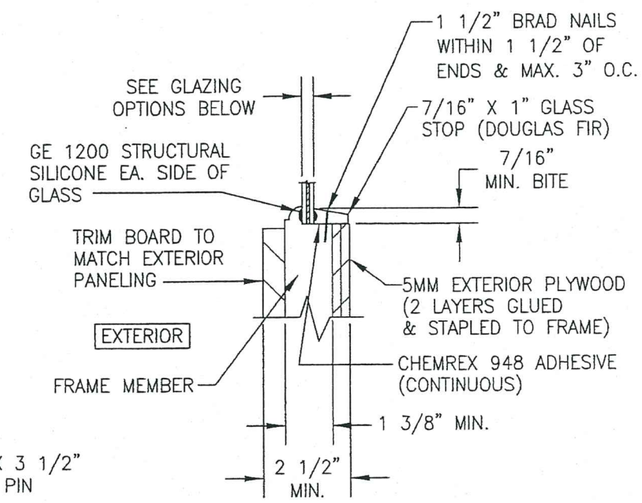

GLAZING DETAIL

GLAZING OPTIONS:
OPTION 1: 3/8" LAMINATED GLASS (1/8" AN/0.09 SOLUTIA SAFLEX IIIG PVB/1/8" AN)
OPTION 2: 3/8" LAMINATED GLASS (1/8" AN/0.09 DUPONT BUTACITE PVB/1/8" AN)

DRAWN BY: W.R.M.	CHECKED BY: W.W.S.
PLOT: 1=4	DATE: 10/21/08

NO.	REVISION DESCRIPTION	BY	DATE

DRAWING TITLE
18 FT. WIDE HURRICANE IMPACT WOOD GARAGE DOORS

MANUFACTURER
DESIGNER PRODUCTS, LLC
dba CAMBEK DESIGNER DOORS
702 TROY ST.
RIVER FALLS, WI 54022
800-241-0525

CONSULTANTS
W. W. SCHAEFER ENGINEERING & CONSULTING, P.A. (CA 6809)
7480 150TH COURT NORTH
PALM BEACH GARDENS, FL 33418
PHONE: 561-744-3424

CERTIFICATION
JUL 17 2019
WARREN W. SCHAEFER, P.E.
P.E. NO. 44135

DRAWING NO. 1618
REV. D
SHEET NO. 5 OF 7

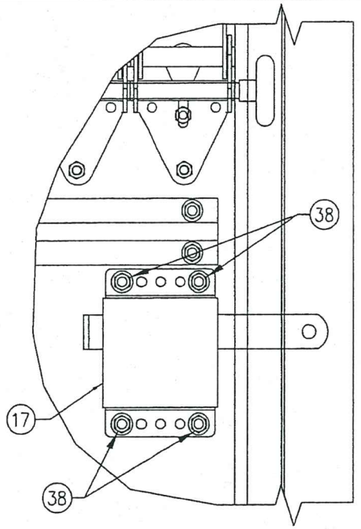

SIDE LOCK DETAIL
(MAY BE LOCATED AT EITHER SIDE OF DOOR)

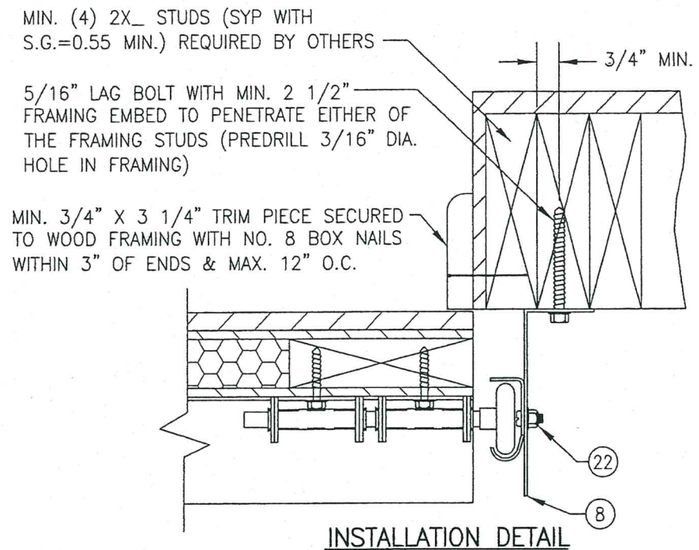

INSTALLATION DETAIL
DIRECT TO WOOD FRAMING

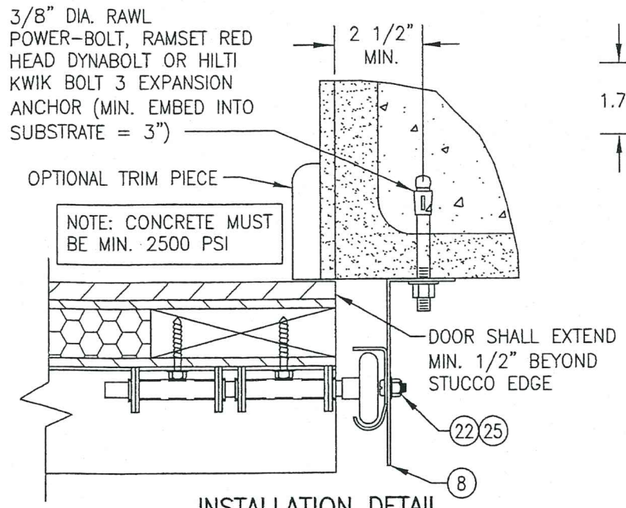

INSTALLATION DETAIL
DIRECT TO FILLED BLOCK
OR SOLID CONCRETE

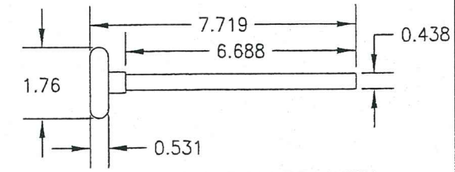

1 NYLON ROLLER WITH AISI STEEL ROD

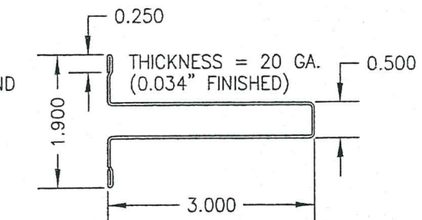

2 3" REINFORCING STRUT

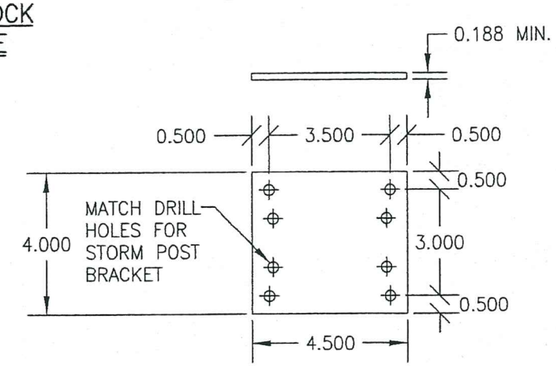

3 ADAPTER PLATE

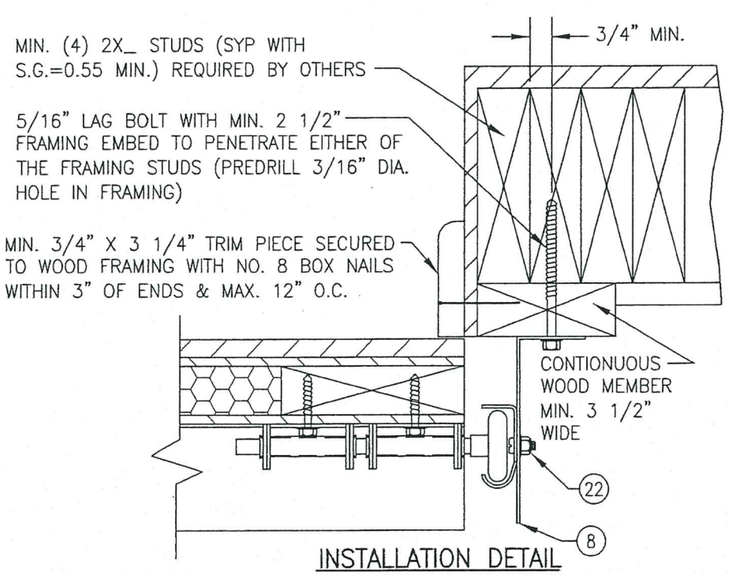

INSTALLATION DETAIL
SHIMMED TO WOOD FRAMING

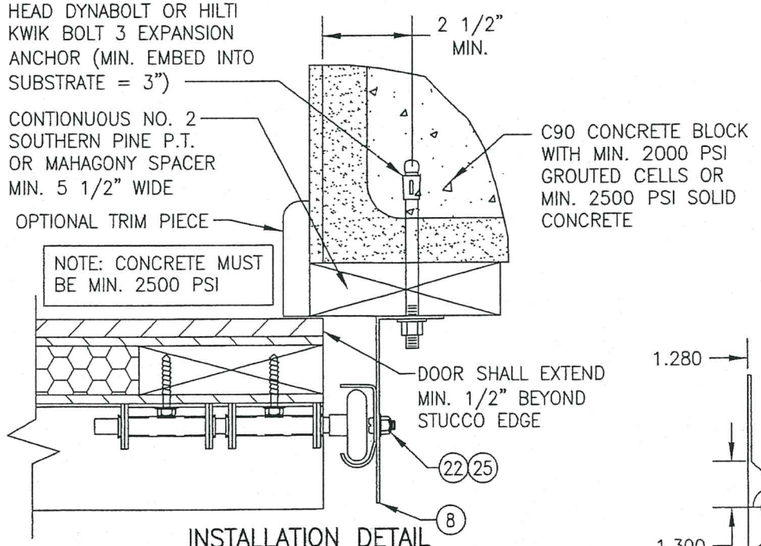

INSTALLATION DETAIL
SHIMMED TO FILLED BLOCK
OR SOLID CONCRETE

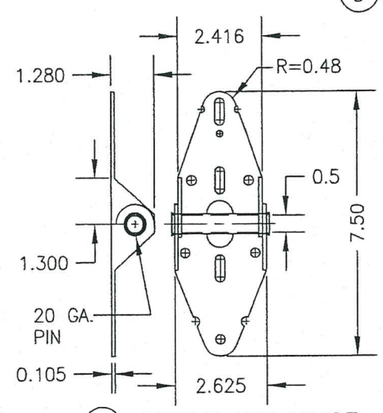

4 SINGLE PIN HINGE

PRODUCT RENEWED
as complying with the Florida Building Code
NOA-No. 19-0723.02
Expiration Date 03/18/2025
By
Miami-Dade Product Control

PRODUCT REVISED
as complying with the Florida Building Code
NOA-No. 20-0622.27
Expiration Date 03/18/2025
By
Miami-Dade Product Control

DRAWN BY: W.R.M.	CHECKED BY: W.W.S.
PLOT: 1=4	DATE: 10/21/08

NO.	REVISION DESCRIPTION	BY	DATE

DRAWING TITLE
18 FT. WIDE HURRICANE IMPACT WOOD GARAGE DOORS

MANUFACTURER
DESIGNER PRODUCTS, LLC
dba CAMBEK DESIGNER DOORS
702 TROY ST.
RIVER FALLS, WI 54022
800-241-0525

CONSULTANTS
W. W. SCHAEFER ENGINEERING & CONSULTING, P.A. (CA 6809)
7480 150TH COURT NORTH
PALM BEACH GARDENS, FL 33418
PHONE: 561-744-3424

CERTIFICATION
JUL 17 2019
WARREN W. SCHAEFER, P.E.
P.E. NO. 44135

DRAWING NO. 1618
REV. D
SHEET NO. 6 OF 7

ITEM #	ITEM DESCRIPTION	MANUFACTURER/NOTES
	PARTS & HARDWARE	
1	ROLLER	NYLON W/AISI 1045 STL. ROD
2	3" REINFORCING STRUT	GALV. 80 KSI STEEL
3	ADAPTER BRACKET	MIN. 3/16" A-36 STEEL
4	SINGLE ROLLER HINGE	GALV. 36 KSI STEEL
5	DOUBLE ROLLER HINGE	GALV. 36 KSI STEEL
6	BOTTOM CABLE BRACKET	GALV. 36 KSI STEEL
7	ADJUSTABLE TOP BRACKET	GALV. 36 KSI STEEL
8	TRACK ANGLE (TAPERED)	GALV. 33 KSI STEEL
9	VERTICAL TRACK (HORIZ. TRACK SIMILAR)	GALV. 33 KSI STEEL
10	HORIZONTAL REINFORCEMENT ANGLE	2" X 2" X 13GA GALV. 33 KSI STEEL
11	STORM POST	1 3/4" X 1 3/4" X 0.105" THICK GALV. 50 KSI STEEL
12	STORM POST TOP BRACKET	A-36 STEEL
13	STORM POST INTERMIEDIATE BRACKET	A-36 STEEL
14	STORM POST INTERMIEDIATE BRACKET STRAP	A-36 STEEL
15	STORM POST BOTTOM END ANGLE	A-36 STEEL
16	POST CABLE	ø0.125" GALV. OR S.S.
17	SLIDE LOCK	STEEL 1018 ZINC PLATED
	MISCELLANEOUS FASTENERS	
20	1/4 X 1 1/2 HEX WASHER HEAD LAG SCREW	ALIGNED WITH HINGES PER ELEVATIONS
21	3/8-16 BOLT	2 AT EACH TOP BRACKET
22	1/4-20 X 5/8 RIB NECK TRACK BOLT	2 PER TRACK (FIELD DRILLED & INSTALLED)
23	1/4 X 1 1/2 HEX WASHER HEAD LAG SCREW	8 PER TOP BRACKET
24	1/4 X 1 1/2 HEX WASHER HEAD LAG SCREW	4 PER HINGE
25	1/4-20 X 5/8 RIB NECK TRACK BOLT	5 PER TRACK
26	1/4 X 1 1/2 HEX WASHER HEAD LAG SCREW	10 PER BOTTOM CABLE BRACKET
27	1/4 X 1 1/2 HEX WASHER HEAD LAG SCREW	2 PER STORM POST INTERMEDIATE BRACKET
28	ø0.031 X 2 1/2 CLEVIS PIN/CABLE ASSEMBLY	1 PER BRACKET; McMASTER CARR #9B416A017
30	5/16-18 X 3/4 CARRIAGE BOLT	2 PER BOTTOM BRACKET CONNECTION
31	5/16-18 SERRATED FLANGE NUT	2 PER BOTTOM BRACKET CONNECTION
32	1/2" X 8" CARRIAGE BOLT (GRADE 5)	1 PER STORM POST TOP ASSEMBLY
33	1/2" SERRATED FLANGE NUT	2 PER STORM POST TOP ASSEMBLY
34	1/4-20 X 3/4" F.H. MACHINE SCREW	2 PER ADAPTER PLATE
35	1/4-20 X SERRATED FLANGE NUT	2 PER ADAPTER PLATE
36	ø1/2" X 3 1/2" CLEVIS PIN	1 PERSTORM POST BOTTOM END ANGLE
37	1/2" PUSH NUT RETAINER	1 PER BRACKET; McMASTER CARR #98807A034
38	1/4 X 1 1/2 HEX WASHER HEAD LAG SCREW	4 PER SLIDE LOCK

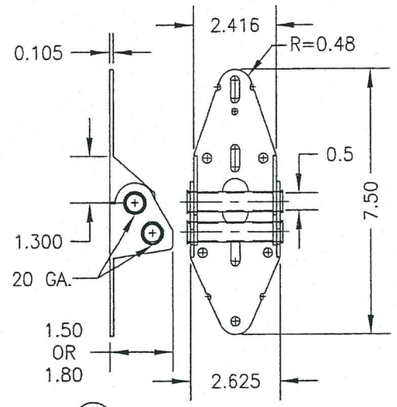

5 DOUBLE PIN HINGE

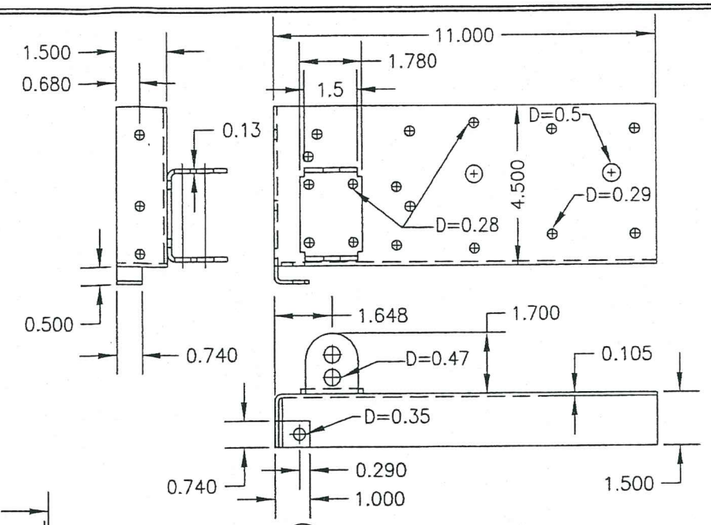

6 BOTTOM CABLE BRACKET

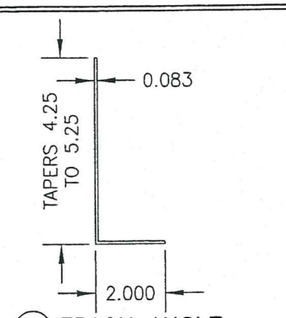

8 TRACK ANGLE

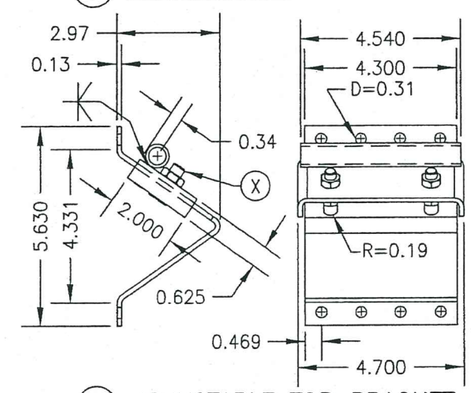

7 ADJUSTABLE TOP BRACKET

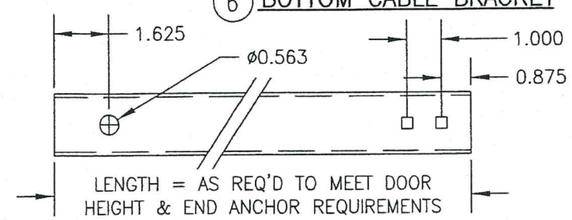

11 STORM POST

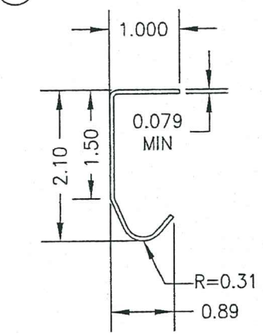

9 TRACK

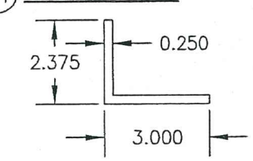

15 STORM POST BOTTOM END ANGLE

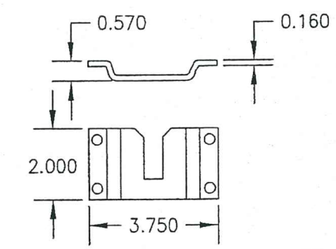

12 STORM POST TOP BRACKET

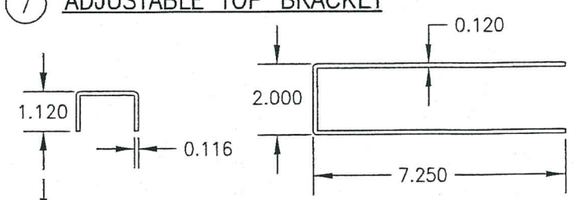

14 STORM POST INTERMIEDIATE BRACKET STRAP

(WIDTH = 0.750)

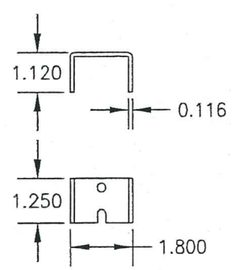

13 STORM POST INTERMIEDIATE BRACKET

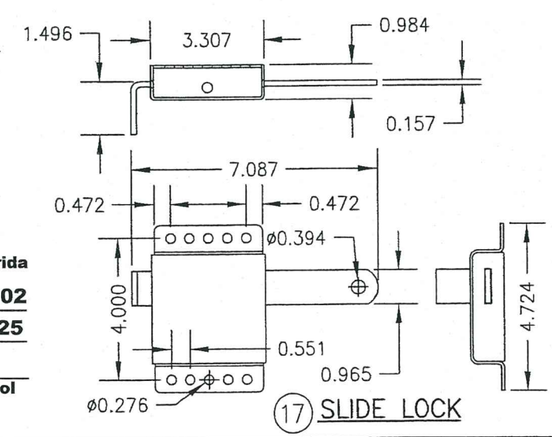

17 SLIDE LOCK

PANEL NOTES:

1. HORIZONTAL & VERTICAL FRAME MEMBERS ARE EDGE COPED, BUTTED TOGETHER & GLUED WITH TYPE 1 WOOD GLUE. IN ADDITION, THE VERTICAL MEMBERS ARE SCREWED TO THE HORIZONTAL WITH 2 NO. 8 X 2" SCREWS ANGLED FROM THE BACK FACE OF THE DOOR.
2. 5mm PLYWOOD IS STAPLED TO THE FRAME WITH 18 GA. X 5/8" X 1/4" STAPLES AND GLUED WITH DEGABOND 948 URETHANE ADHESIVE OR EQUIVALENT.
3. THE EXTERIOR PANEL/STRIPS ARE ATTACHED TO THE 5mm PLYWOOD AND FRAME WITH 18 GA. X 1 1/2" X 1/4" STAPLES AND CHEMREX 948 URETHANE ADHESIVE.
4. EXTERIOR FINISH WOOD (PANELS/STRIPS) USED IN TESTING WAS NO. 2 WESTERN RED CEDAR WITH A SPECIFIC GRAVITY OF G = 0.32. OTHER WOOD SPECIES APPLICABLE FOR USE WITH THIS PRODUCT ARE THOSE WITH A SPECIFIC GRAVITY OF 0.32 OR GREATER.
5. ALL INTERIOR FRAME MEMBERS SHALL BE NO. 2 DOUGLAS FIR WITH G = 0.49.
6. IT IS THE OPTION OF DESIGNER DOOR TO INCORPORATE AN INTERIOR FINISH FACE ON ANY DOOR. THIS FACE SHALL BE EQUAL TO THOSE EXTERIOR FACES APPROVED PER THE DETAILS ON THIS DRAWING AND BE SECURED TO THE DOOR IN THE SAME MANNER AS THE EXTERIOR FACE. THIS INTERIOR FACE SHALL BE AN ADDITIONAL LAYER AND SHALL NOT REPLACE ANY LAYER SHOWN IN THE DETAILS ON THIS SHEET. ALSO, ALL HARDWARE LAG SCREWS SHALL BE LENGTHENED TO MIN. 2 1/4" TO ALLOW FOR THE ADDITIONAL THICKNESS OF THE ADDED INTERIOR SKIN.

PRODUCT REVISED
as complying with the Florida Building Code
NOA-No. 20-0622.27
Expiration Date 03/18/2025
By _____
Miami-Dade Product Control

PRODUCT RENEWED
as complying with the Florida Building Code
NOA-No. 19-0723.02
Expiration Date 03/18/2025
By _____
Miami-Dade Product Control

DRAWN BY: W.R.M.	CHECKED BY: W.W.S.
PLOT: 1=4	DATE: 10/21/08

NO.	REVISION DESCRIPTION	BY	DATE

DRAWING TITLE
18 FT. WIDE HURRICANE IMPACT WOOD GARAGE DOORS

MANUFACTURER
DESIGNER PRODUCTS, LLC
dba CAMBEK DESIGNER DOORS
702 TROY ST.
RIVER FALLS, WI 54022
800-241-0525

CONSULTANTS
W. W. SCHAEFER ENGINEERING & CONSULTING, P.A. (CA 6809)
7480 150TH COURT NORTH
PALM BEACH GARDENS, FL 33418
PHONE: 561-744-3424

CERTIFICATION
JUL 17 2019
WARREN W. SCHAEFER, P.E.
P.E. NO. 44135

DRAWING NO. 1618
REV. D
SHEET NO. 7 OF 7